WIRING DIAGRAMS

Fig. 11: J1 & J3 Junction Conn, Interior Lts (Grid 40-43)
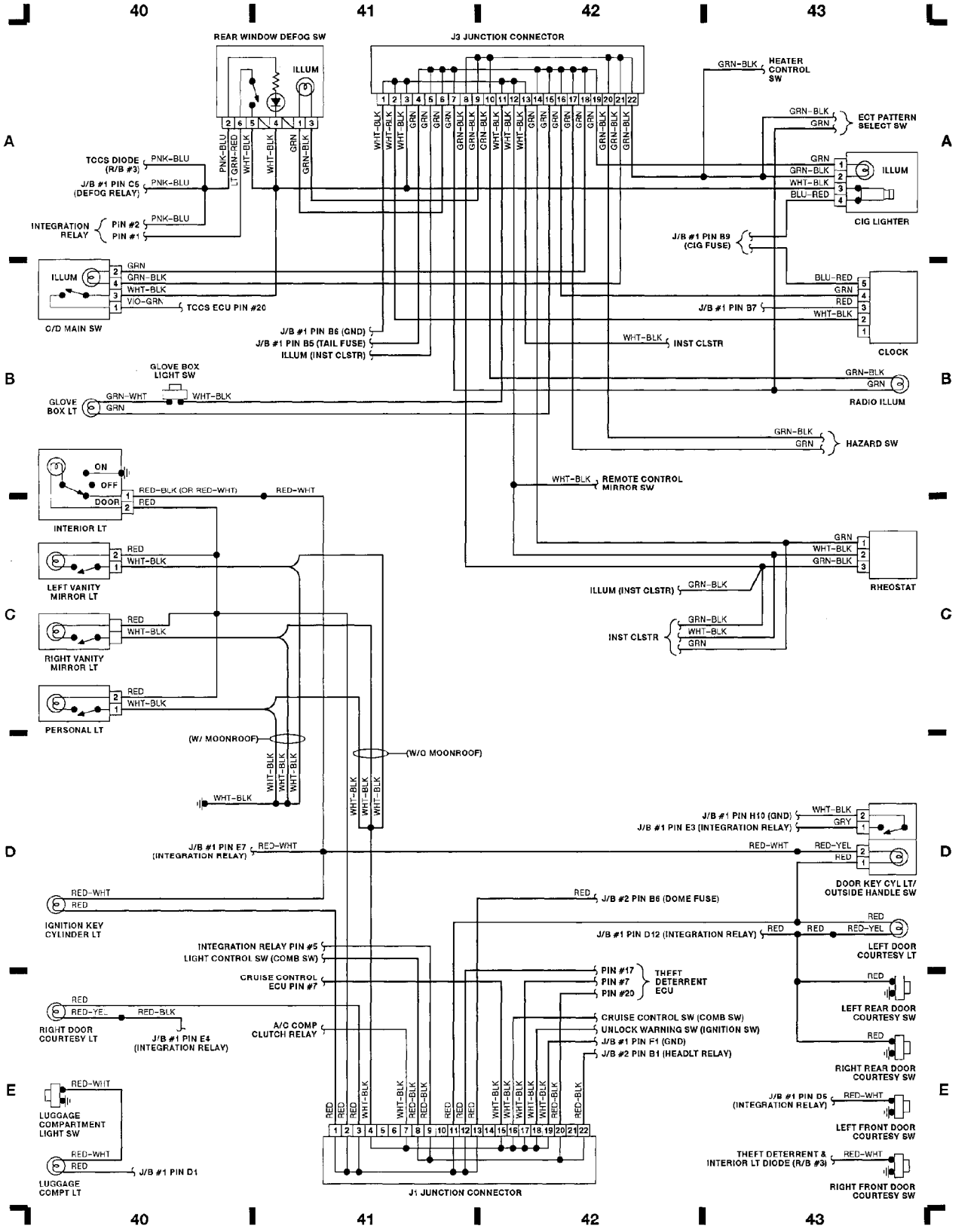
1991 Toyota Cressida