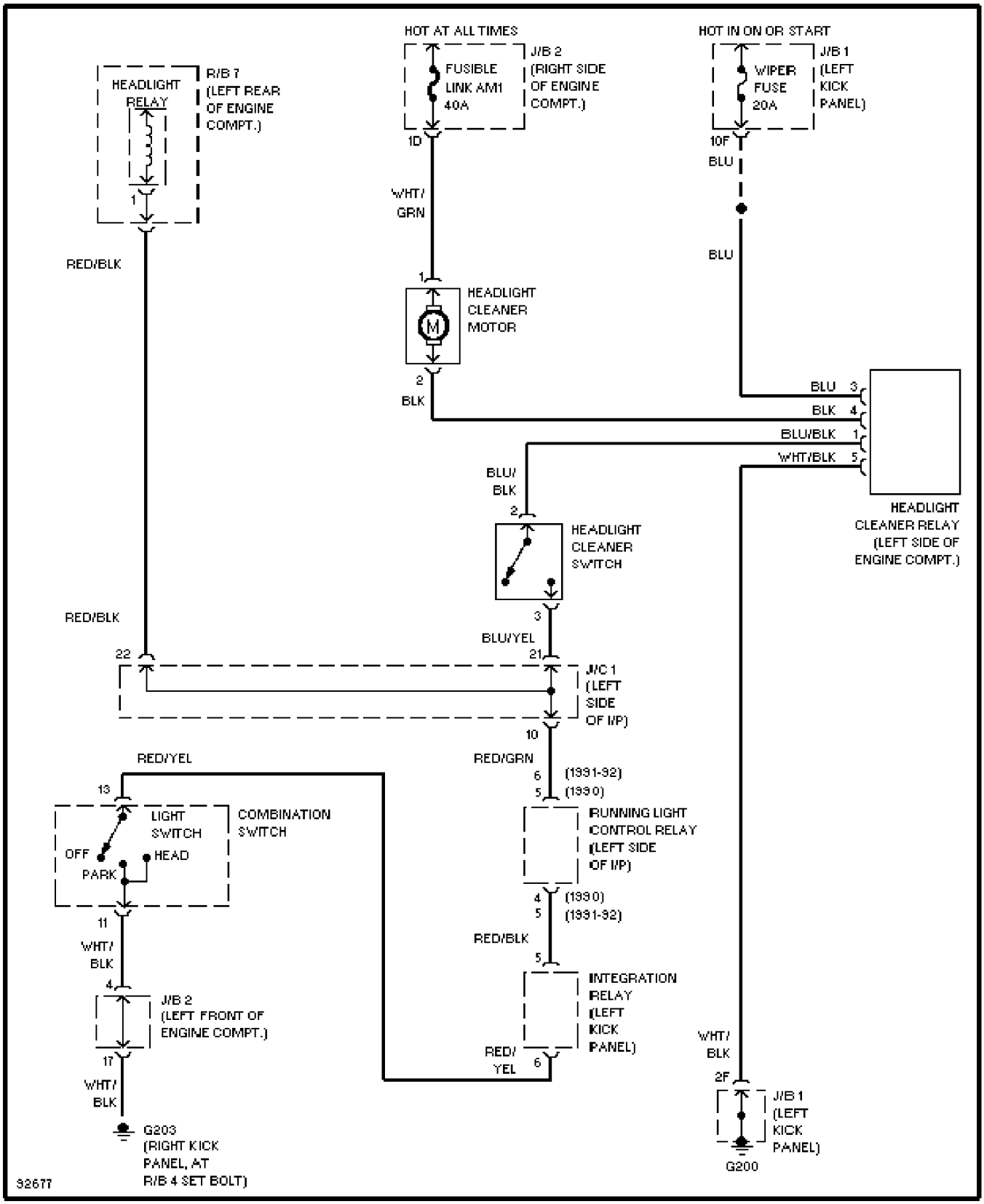SYSTEM WIRING DIAGRAMS
Headlamp Washer Circuit
1991 Toyota Cressida