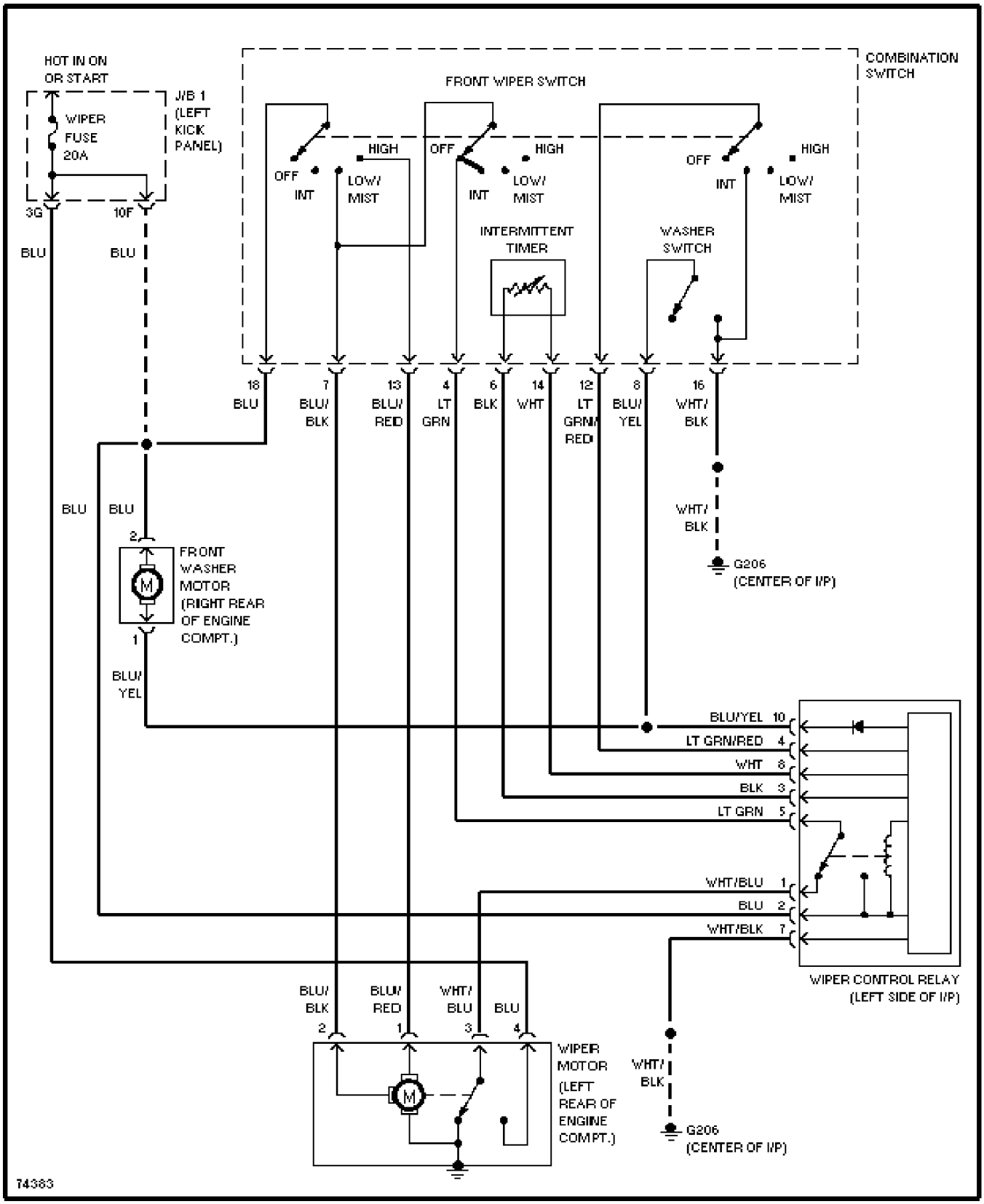SYSTEM WIRING DIAGRAMS
Front Wiper/Washer Circuit
1991 Toyota Cressida