WIRING DIAGRAMS

Fig. 9: Combination Switch, Relay Blocks #4 & #3 (Grid 32-35)
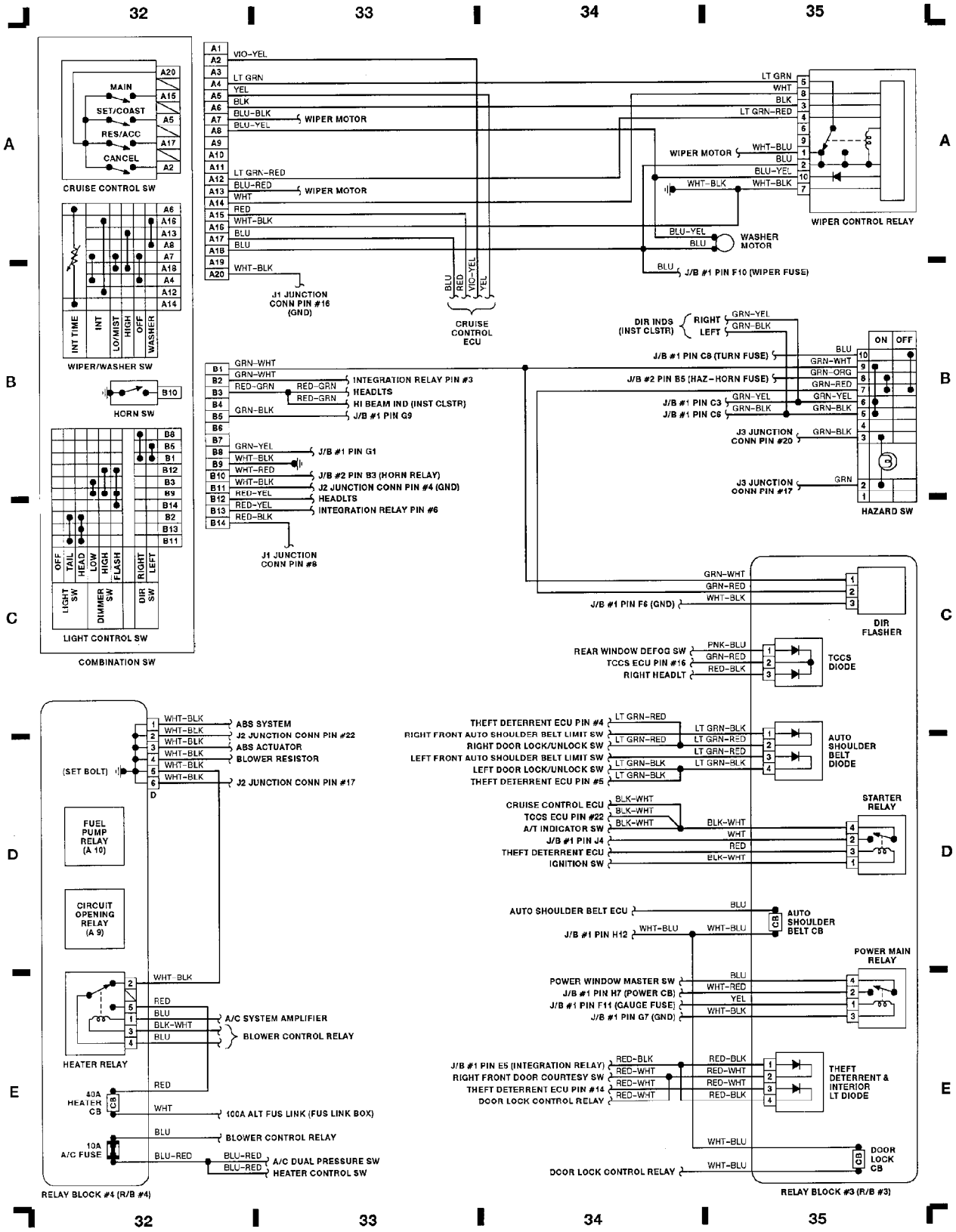
1991 Toyota Cressida